INTERNATIONAL LIMITED WARRANTY

ARX Systems (ARX) warrants to the first purchaser of any ARX equipment that it is free from defects in materials and workmanship under normal use and service. ARX's sole obligation under this warranty shall be to provide, without charge, parts and labour necessary to remedy defects, if any, which appear within twelve (12) months from date of purchase, and for a further twelve (12) months supply parts only.

This is our only warranty. It does not cover finish or appearance items, burned voice coils, or if the equipment has been, in ARX's sole judgement:

•Subjected to misuse, abuse, negligence or accident;

•Repaired, worked on, or altered by persons not authorized by ARX;

•Connected, installed, adjusted or used for a purpose other than that for which it was designed. This includes running a speaker system with the ISC leads disconnected, or with a non-ARX crossover, or with the wrong processor.

This warranty gives you and us specific legal rights and you may also have other rights which may apply.

Warranty Service Procedure

Should it become necessary to have your equipment serviced under the terms of the warranty, please follow these steps:

1. Call your ARX distributor for a Return Authorization (RA) number;
2. ***Carefully*** repack the unit, in its original packaging where possible, including a note with a description of the problem, and a copy of the receipt showing date of purchase. Attach these to the actual unit itself. Don't forget to write your name and address clearly, and include a phone number where you can be contacted during normal business hours. Make it easy for our service technicians to contact you if they have a question. Also, use ***plenty*** of packing material - better to be safe than sorry.
3. Send the unit freight prepaid to ARX Systems, at the address given you with your RA number. We will pay the return freight when the serviced unit is returned to you.
4. We strongly recommend you insure the package. We can't fix it if it gets lost! Send it by UPS, Fedex, or any similar service that can track the package. Parcel Post is *not* recommended

If Warranty Registration Card is missing, please write to ARX in the country of purchase, stating model and where purchased, or to ARX, PO Box 15, Moorabbin, Victoria 3189, Australia.

Or you can Email us at: info@arx.com.au

PowerDrive™

Three Channel Integrated Power Amplifier

OWNER'S MANUAL

www.arx.com.au ®

ARX Systems Pty Ltd, PO Box 15,
Moorabbin, Victoria 3189, Australia
Phone: (03) 9555 7859 **Fax**: (03) 9555 6747
International Fax: +61-3 -9555 6747
On the Web: www.arx.com.au
Email: info@arx.com.au

IMPORTANT - This amplifier is designed to be connected ONLY to the AC voltage ticked ☑ below

☐ **100 V AC, 50 - 60 Hz**

☐ **120 V AC, 50 - 60 Hz**

☐ **220 V AC, 50 - 60 Hz**

☐ **240 V AC, 50 - 60 Hz**

It is essential that you check that this voltage is correct for your area before connecting it to AC power. Do not plug power cable into AC power until voltage has been checked. If incorrect, contact your ARX distributor.

Your warranty does not cover connecting the amplifier to the wrong voltage AC power!

FUSE

This amplifier has a fixed power lead with an external fuse mounted on the chassis. Replace fuse only with another of the correct value as marked on the rear of the amplifier

WARNING SYMBOLS USED ON THIS EQUIPMENT

This symbol is intended to alert you to the presence of important operating instructions contained in this owner's manual

This symbol is intended to alert you to the presence of uninsulated dangerous voltage within the product's enclosure that may be of sufficient magnitude to constitute a risk of electric shock.

This symbol indicates that a Slow Blow fuse is used in this equipment. Replace with same type and value only

CAUTION
RISK OF ELECTRIC SHOCK
DO NOT OPEN

TO PREVENT ELECTRIC SHOCK, DO NOT REMOVE COVER OR BACK OF UNIT
NO USER-SERVICEABLE PARTS INSIDE
REFER SERVICING TO QUALIFIED PERSONNEL

WARNING

TO PREVENT FIRE OR SHOCK HAZARD, DO NOT EXPOSE THIS UNIT TO RAIN OR MOISTURE.

ATTENTION

RISQUE DE CHOC ÉLÉCTRIQUE - NE PAS OUVRIR

CE N1819

Complies with 89/336/EEC EMC Directive, amended by 92/31/EEC and 93/68/EEC and meets the following standards:EN 55013 : 1990, Sections 3.2 and 3.5 EN 55020 : 1988, Sections 4.3, 5.4, 6.2, 7.0, 8.0.
Complies with Australian Standard AS/N25 1053

Specifications

Input Impedance	40 Kohms electronically balanced
CMRR	>50 dB, @ 1 KHz
Channel Separation	-88 dB, unweighted
Dynamic Range	110 dB
Distortion (THD)	.01% @ +4 dB, 1 KHz
Crossover Frequency	100Hz (to SUB channel)
HighPass Filters	35 Hz SUB output 45 Hz A/B outputs
Input Connectors	XLR (Pin 1 Ground, Pin 2 +, Pin 3 –)
Output Connectors	3 x Neutrik Speakon, using 1– and 1+ on each connector (Left, Right, and Sub)
Line Outputs	TRS Jacks (Tip +, Ring –, Sleeve Ground)
Power Requirements	100, 120, 220, 240V AC, 50-60 Hz, supplied Zone Specific
Output Power	
Channels A and B	340Watts/8 ohms, 500Watts/4 ohms
Sub Channel	730Watts/4 ohms, 1050Watts/2 ohms
Maximum Units Driven	2 x PowerMAX 1, 2, 3 or 4 per side from Channels A and B; 2 x PowerMAX SUB from Sub Channel
Weight	20 Kg (44 lbs)
Front Panel Controls	Level controls for Channels A, B and Sub.
Construction	All steel monococque construction

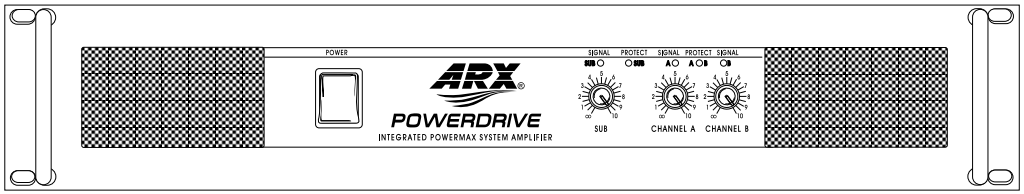

Front Panel

- EasyGrip Handles
- Detented Level controls for Channels A, B, and Sub
- Protection and Signal present LEDs
- 4 mm steel front panel
- Non-scratch Lexan printed panel
- Illuminated power switch
- Fan filters

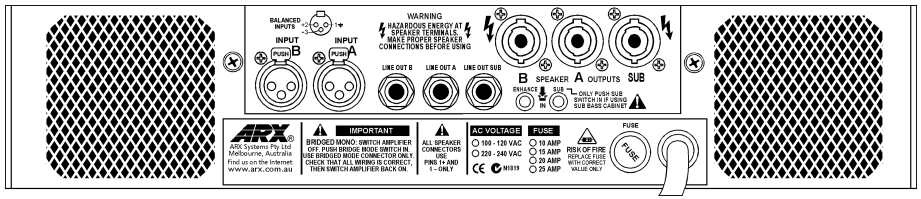

Rear Panel

- Variable speed DC cooling fans (4 per amp)
- Balanced XLR Inputs (Pin 1 Ground, Pin 2 +, Pin 3 –)
- Sub Enable switch
- Enhance switch
- Neutrik Speakon speaker connectors (using Terminals 1+ and 1–)
- A, B and Sub Line Outputs
- AC Power Lead and fuse
- Rear rack ears for four point racking

Line Outputs

These are TRS Jack connectors to enable sending the processed line outputs of channels A, B, and Sub to the inputs of other amplifers, without having to use extra PowerPro speaker processors. Wiring is Tip +, Ring –, Sleeve ground.

Enhance Switch

Pushing this switch in activates a circuit that dynamically increases the LF and HF portions of the signal, at around 50 Hz and 10 KHz respectively. Think of it as a smart Loudness control.

Sub Active switch

Pushing this switch in rolls off the Low frequencies below 100 Hz in Channels A and B, and sends them to the Sub amplifier section of the PowerDrive. Use it if you are using a SUB speaker. If not, don't push it in and Channels A and B will run full range.

Things to check before you plug the amplifier in

Main AC power - check that the voltage on your PowerDrive or MicroDrive is the same as the voltage at the power point. It is a good idea to check this before plugging the amplifier into the power point. Be especially careful of plugging into unchecked 'piggyback' plugs, power distribution boxes or extension cables.

Your warranty does not cover damage caused by incorrect wiring.

Make sure the PowerDrive is connected to the same AC power supply and Earth/Ground as the rest of the system, otherwise you may set up an Ground loop hum.

The PowerDrive weighs approximately 20 kilos/44 lbs. We **strongly** recommend that you use the rear mounting slots as well as those on the front panel.

There are 4 cooling fans that circulate air around and through the heatsinks.

Air flow diagram

It is ***extremely*** important that you ensure that there is ***unrestricted*** air access to these fans, and also ***unrestricted*** air exit path. Clean the fan filters regularly or at the first sign of becoming clogged.

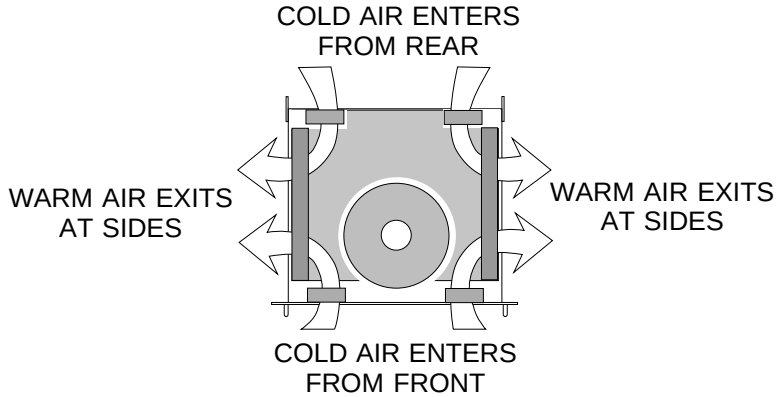

The PowerDrive amplifier has sufficient fan cooling capacity built in, and needs no extra external fan cooling to operate normally. Its compact 'UltraFin' heatsinks provide massive surface areas for rapid cooling and stable temperatures.

BUT...

When racking up PowerDrive amplifiers, a you MUST allow space for the air to exit from the ***sides*** of the amplifier. Remember that Power = Heat, and Maximum air flow = successful heat management.

The easy way to handle it is to follow the Air Flow diagram above, and have open sides to the rack, optionally covered with wide steel mesh. Don't let anything block these open sides - the air must have a way out.

To give you some idea of the heat involved, in the case of the PowerDrive we're talking about the same power output in watts as a medium size electric bar radiator!

WARNING!

THERE ARE NO USER SERVICEABLE PARTS INSIDE THE AMPLIFIER, SO PLEASE DON'T TAKE THE LID OFF AND POKE AROUND!

Amplifiers run on DC voltages provided by the amplifier's internal power supply. The PowerDrive has separate + and – DC fuses for both channels, mounted internally on the power supply circuit board. The power Mosfets used in the amplifiers are extremely rugged devices, and the correct rating fuses in the power supply ensure that the amplifier circuitry is protected from short circuit damage.

A blown DC fuse will be indicated by a very distorted low volume output from that side of the amplifier. A blown AC fuse will be indicated by nothing working at all - check to see if the fans are turning.

Any blown fuse should be investigated. It doesn't necessarily mean that something is wrong with the amplifier, but indicates that there is something wrong in the complete signal path, from the mixing console to the speakers.

If an AC fuse blows:

- Switch the power off, replace the fuse with another of the same rating.
- Switch the power back on.
- If it blows again, switch the power off and disconnect the Input and Speaker leads from the amplifier. Replace the fuse with another of the same rating.
- If it doesn't blow when you switch it back on, then the fault is somewhere else. Time to start checking those leads.
- If the fuse does blow again, then contact your nearest ARX service centre or the dealer where you bought the amplifier.

If a DC fuse blows:

- Get a qualified service person to inspect inside the amplifier. Please don't do it yourself! There are **very** dangerous voltages inside amplifiers, even when they have been turned off!

Introduction

Thank you for choosing this ARX PowerDrive amplifier. We hope you enjoy using it as much as we enjoyed creating it. It is a precision engineered product designed for professional use in all pro-audio applications, and as such, a working knowledge of basic electronic safety procedures is assumed on the part of the operator.

Like all ARX equipment, it has undergone extensive factory calibration, testing and 'burn in' before shipping. To ensure continued trouble free use, please familiarise yourself with the contents of this manual before using.

About the PowerDrive amplifier

Based on multiple channels of the rugged ARX 'SX' Series amplifiers, the PowerDrive is truly the system of the future!

They have everything you need to run either a complete PowerMAX system, in one compact 2 RU package. Channel A and B, plus a powerful Sub channel. Simply connect your mixer outputs and your speaker leads and that's it - there's nothing else to wire up!

The PowerDrive integrated system amplifier is a three channel unit with a PowerPRO speaker processor already built in, making it the ideal rental company/installation PowerMAX package. It also has an 'Enhance' function to provide the dynamic impact of a much larger system.

Rear Panel options includeNeutrik 'Speakon' insulated speaker connectors for fast 'plug and play' setups.

There are also pre-processed line outputs for Channels A, B and Sub, so existing amplifier inventory is not made redundant when larger systems need to be assembled.

The PowerDrive will run two PowerMAX cabinets per side plus two Power-MAX Subs. The same powerful sound, the same failsafe speaker protection as a disctete amplifier/processor combination, neatly housed in an ultra compact 2 RU package!

The PowerDrive is a further example of the ARX commitment to produce amplifiers that will survive the toughest musical environment, day after day, night after night, because we know that audio professionals like yourself depend on them to earn a living.